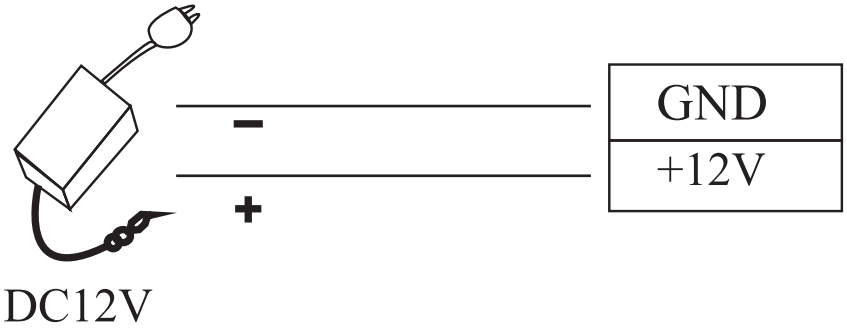

Wiegand connections:

Wiegand interfaces are a trademark that belongs to the Sensor Engineering Company, designed to allow the transmission of the data in a card between two devices that are away from each other, such as a card scanner and the central access control panel. The Wiegand protocol is widely used by manufacturers, as it allows for the easy transmission of information through a copper pair connected to the device's power source without affecting the data quality.

¿When should we use the Wiegand protocol?

We need it when we want to use two devices in the same access point, such that only one of them has the ability to control access.

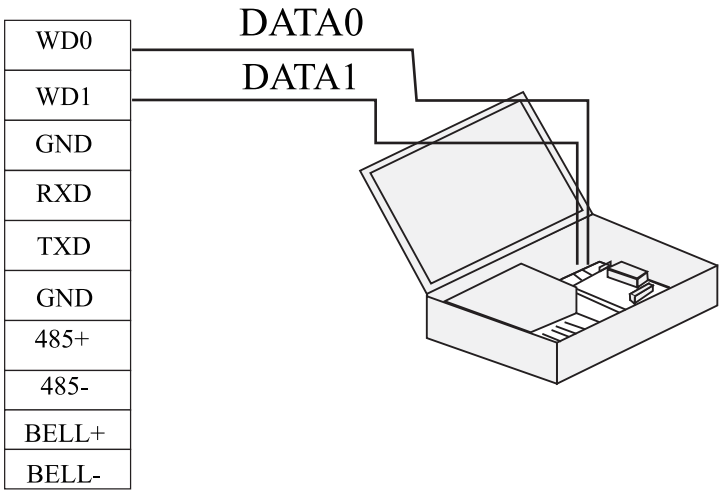

Conexions Manual

BIOTRACK

The Wiegand input connection is normally referred to as the “master” connection, as it is the one to which the lock is connected:

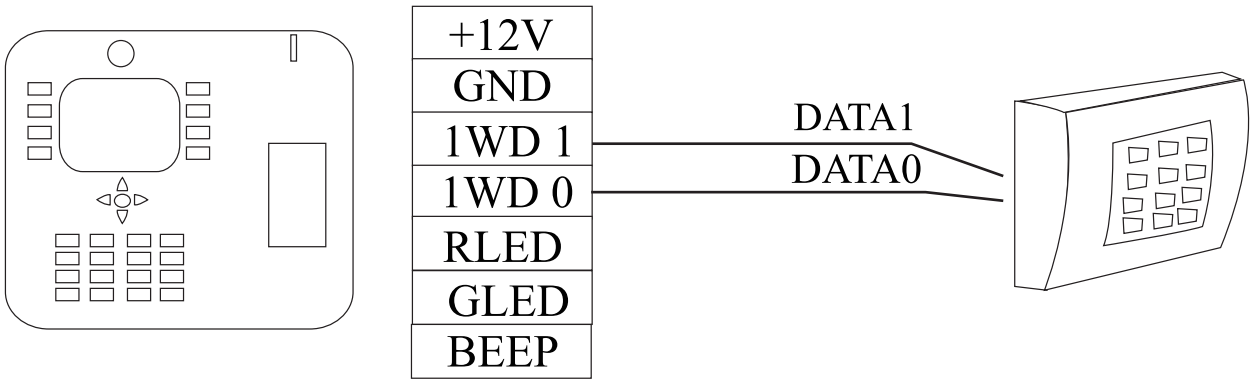

Note: The distance between the master and slave devices must be less than 3.5 m (3.83 yd.)

Device Communication via serial port:

1 RS232

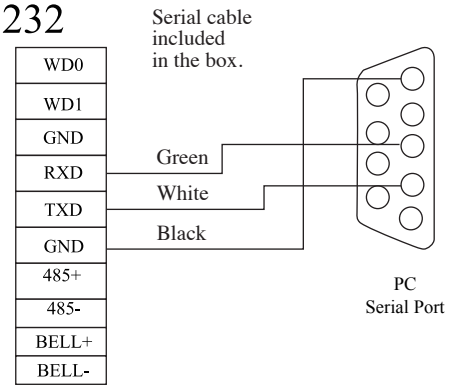

Terminal Definition

Terminal Number	PC Serial Port
TXD	Pin2-Txd
RXD	Pin3-RXD
GND	Pin5-Gnd

2.RS485

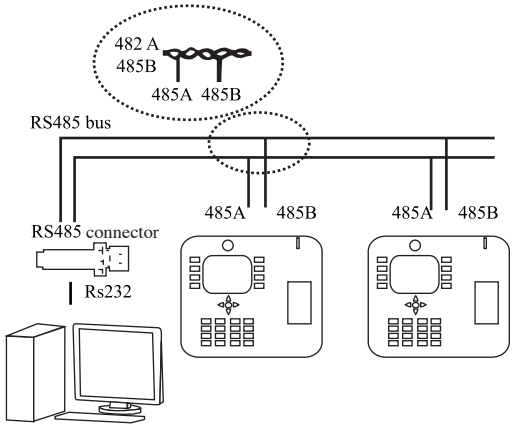

Terminal Number	PC Serial Port
485+	RS485+ Communication
485-	RS485- Communication

Conexions Manual

BIOTRACK

WARNING: Do not plug in to power source until the installation is complete.

Device Communication via TCP/IP:

1) Connection between a reader and a PC via a crossed cable.

Joint 1	Pin		Pin	Joint 2
TX+	1	<——>	3	RX+
TX-	2	<——>	6	RX-
RX+	3	<——>	1	TX+
RX-	6	<——>	2	TX-

IP: 192.168.1.100
Mask: 255.255.255.0

IP: 192.168.1.124
Mask: 255.255.255.0

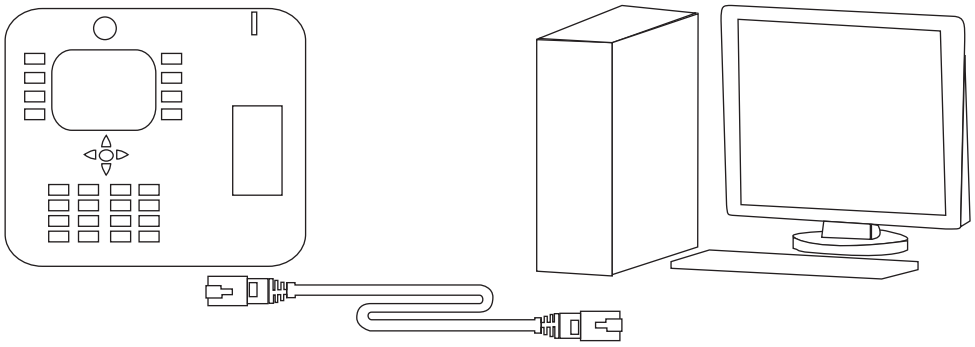

LAN Connection:

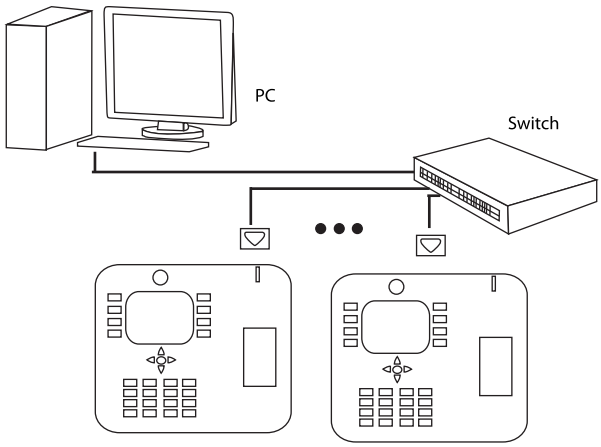

Order of cables	Pin		Color		Pin	Order of cables
TX+	1	<	white-orange	>	1	TX+
TX-	2	<	orange	>	2	TX-
RX+	3	<	white-green	>	3	RX+
	4	<	blue	>	4	
	5	<	white-blue	>	5	
RX-	6	<	green	>	6	RX-
	7	<	white-brown	>	7	
	8	<	brown	>	8	

Other functions:

Manual restart

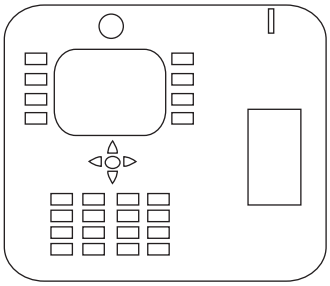

Front

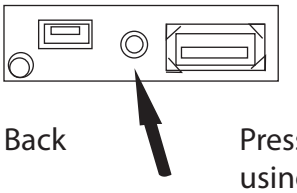

Back

Press this button using a tool with a fine tip 2mm (0.08 inches) in diameter.

If for some reason the device stops working properly, use this function to manually reset it.

Notes:

1. Make sure the connection is properly set up before plugging the device to a power source.
2. We recommend using a DC12V/3A current adaptor. If you need more information, please ask our technicians.
3. Do read the wiring manual carefully, as any damage caused by improper connections is not covered by the service warranty.
4. Make sure to insulate all connection cables so that none remains bare.
5. In order to prevent damage caused by winter static or in places with too much static, connect the earth cable first and then the others.
6. If there is a large distance between the power source and the device, do not use network cable. Not choosing the right type of cable for the power source can cause attenuation and tension (noise in the signal).
7. If the RS485 communication distance is over 100 m (109.4 yd.), add a 120 Ω resistance to the RS485 data bus.
8. The device must be connected to the network in order to be able to add users with the access control software.

Make sure to follow all installation recommendations enclosed here, as we cannot assume any responsibility from the failure to do so.